RH103 Accelerometer Technical Specification

Product Features

Built-in IEPE circuit, isolation output, constant current supply.

Laser seal welded.

The military connector can be used for on-site industrial on-line monitoring in hazardous environment.

Product Pictures

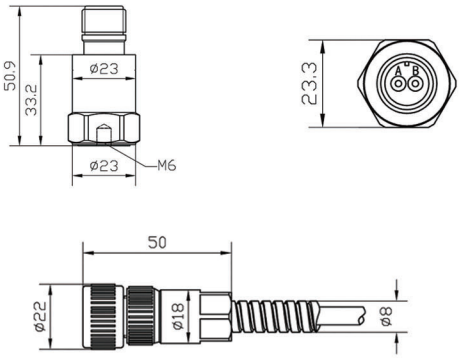

Technical Parameters

Parameters	Index	Remarks
Basic parameters		
Sensitivity(±10%)	100mv/g	
Acceleration range	±80g	
Amplitude Linearity	1%	
Frequency range (±10%)	0.5~10KHz	
Frequency range (±3dB)	0.5~15KHz	
Resonant frequency	26KHz	
Transverse Sensitivity	≤5%	
Electrical parameters		
Bias Voltage	10-12VDC	
Constant current	2-20mA Typical:4mA	
Voltage Excitation	18-30VDC Typical:24VDC	
Settling Time	≤2s	
Spectral Noise	10Hz 14μg/√Hz 100Hz 5μg/√Hz 1000Hz 3μg/√Hz	
Output Impedance	<150Ω	
Case isolation	$>10^8$ Ω	

Physical parameters		
Maximum shock Level	5000g	
Mounting thread	6mm	
Weight	81g	
Size	Diameter×height:23×50.9(mm)	
Sealing	Laser welding	
Sensing geometry	Plane shear	
Housing material	316L Stainless Steel	
Output method	Top output, 2pins Mil-C-5015	
Temperature range	-40 ~ +120℃	
Mount Torque	About 2.7 ~ 6.8N.m (M6)	
Certification	CE	
Explosion-proof options		
Marking	ExiaIICT4	Used for 0,1,2 Area
Temperature measuring options (not standard configuration, optional)		
Measuring range	0~120℃	1.Type:RH103T 2.Output method: Top output,3pins Mil-C-5015
Sensitivity	10mv/℃	